YINGJIAO®

YEP150 SERIES 150W



YEP series are designed with lower profile housing and for wide range AC input from 90 VAC to 305V AC.

The series have build-in active function and operate for the temperature up to 70℃.

The good performance can be used for industrial automation & control systems, varied equipments etc.

Features

- Universal AC Input/ Full Range
- Built-in Active PFC Function
- Built-in Remote ON-OFF Control
- High Efficiency Up To 90%
- Protection:Short Circuit/Overload/ Over Voltage/Over Temperature
- Three Years Warranty

Model Information

Yingjiao Part number	DC VOLTAGE	RATED CURRENT	RATED POWER	VOLTAGE ADJ. RANGE	Max.Capacitive Load
YEP150-5	5V	30A	150W	4.75~5.5V	10000uF
YEP150-7.5	7.5V	20A	150W	6.75~8.25V	8000uF
YEP150-12	12V	12.5A	150W	11.4~13.2V	5000uF
YEP150-15	15V	10A	150W	14.3~16.5V	5000uF
YEP150-24	24V	6.3A	151.2W	22.8~26.4V	5000uF
YEP150-27	27V	5.6A	151.2W	25.7~29.7V	4000uF
YEP150-48	48V	3.2A	153.6W	45.6~52.8V	3000uF

Input

VOLTAGE RANGE	90-305VAC/127-430VDC	
FREQUENCY RANGE	47-63Hz	
POWER FACTOR(Typ.)	PF>0.93/230VAC at full load	
	PF>0.98/115VAC at full load	
AVERAGE EFFICIENCY	87%	YEP150-5
	88%	YEP150-7.5
	89%	YEP150-12
	88.5%	YEP150-15
	89%	YEP150-24
	89.5%	YEP150-27
	90%	YEP150-48
AC CURRENT(Typ.)	1.6A/115VAC	
	0.8A/230VAC	
INRUSH CURRENT(Typ.)	COLD START 45A/230VAC	
LEAKAGE CURRENT	<2mA/240VAC	

Output

RIPPLE & NOISE(max.)	100mVp-p	YEP150-5
	100mVp-p	YEP150-7.5
	100mVp-p	YEP150-12
	100mVp-p	YEP150-15
	150mVp-p	YEP150-24
	150mVp-p	YEP150-27
	250mVp-p	YEP150-48
VOLTAGE TOLERANCE	±2.0%	
LINE REGULATION	±0.5%	
LOAD REGULATION	±1.0%	YEP150-5
	±0.5%	YEP150-7.5
	±0.5%	YEP150-12
	±0.5%	YEP150-15
	±0.5%	YEP150-24
	±0.5%	YEP150-27
	±0.5%	YEP150-48
SETUP, RISE TIME	600ms, 30ms at full load	
HOLD UP TIME(Typ.)	16ms at full load	

Protection

SHORT CIRCUIT	Protection type: Hiccup mode, recovers automatically after fault condition is removed
OVER LOAD	105%-135% Rated Output Power Protection type: Constant current limiting, recovers automatically after fault condition is removed.
OVER VOLTAGE	5V:5.75~ 6.75V 7.5V:8.6~ 10.2V 12V:13.2 ~ 16.2V 15V:16.5 ~ 20.25V 24V:26.4 ~ 32.4V 27V:29.7 ~ 36.45V 48V:52.8~ 64.8V Protection type : Shut down o/p voltage, re-power on to recover.
OVER TEMPERATURE	Protection type : Shut down o/p voltage, recovers automatically after temperature goes down.

Environment

WORKING TEMP.	-30℃ to +70℃ (Refer to "Derating Curve")
WORKING HUMIDITY	20 ~ 90% RH non-condensing
STORAGE TEMP., HUMIDITY	-40℃ to +85℃, 10 ~ 95% RH non-condensing
TEMP. COEFFICIENT	±0.05%/℃ (0~50℃)
VIBRATION	10 ~ 500Hz, 2G 10min./1cycle, 60min. each along X, Y, Z axes
OVER VOLTAGE CATEGORY	Ⅲ; According to EN61558, EN50178, EN60664-1, EN62477-1; altitude up to 2000 meters
MTBF	280K hrs min. MIL-HDBK-217F(25℃)
SAFETY PROTECTION	CLASS I

Safety & EMC

SAFETY STANDARDS	BS EN/EN62368-1, BS EN/EN61558-1,BS EN/EN61558-2-16
WITHSTAND VOLTAGE	I/P-O/P:4KVAC I/P-FG:2KVAC O/P-FG:0.5KVAC
ISOLATION RESISTANCE	I/P-O/P, I/P-FG, O/P-FG:100M Ohms / 500VDC / 25℃ / 70% RH
EMC EMISSION	Compliance to BS EN/EN55032 (CISPR32) Class B,
	BS EN/EN61000-3-2 Class A,BS EN/EN61000-3-3
EMC IMMUNITY	Compliance to BS EN/EN61000-4-3,11 Criteria B
	BS EN/EN61000-4-2,4,5,6,8 Criteria A

Function

REMOTE CONTROL	CN1: < 0~0.8VDC POWER ON , 4~10VDC POWER OFF

Note

1.All parameters NOT specially mentioned are measured at 115/230VAC input, rated load and 25℃ of ambient temperature.

2.Ripple&noise are measured at 20MHz of bandwidth by using a 12" twisted pair-wire terminated with a 0.1uf & 47uf parallel capacitor.

3.The power supply is considered a component which will be installed into a final equipment. The final equipment must be re-confirmed that it still meets EMC directives. For guidance on how to perform these EMC tests, please refer to "EMI testing of component power supplies."

4.Derating may be needed under low input voltages. Please check the derating curve for more details.

5.Strongly recommended that external output capacitance should not exceed 10000uF(Only for the models with output voltage 5/12V)

6.The ambient temperature derating of 3.5 ℃/1000m with fanless models and of 5 ℃/1000m with fan models for operating altitude higher than 2000m(6500ft).

Dimensions & Weight

Length:	179mm / 7.05in
Width:	99mm / 3.9in
Height:	30mm / 1.18in
Weight:	550g

Mechanical Specification

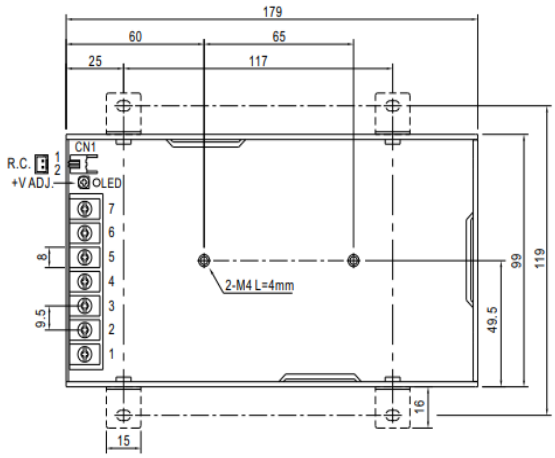

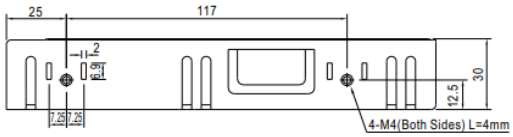

Input

No.	Description
1	AC/L
2	AC/N
3	FG ⏚

Output

No.	Description
4,5	DC OUTPUT -V
6,7	DC OUTPUT +V

Remote ON/OFF(CN): JST S2B-XH or equivalent(optional)

No.	Description	Mating Housing	Terminal
1	RC+	JST XHP or equivalent	JST SXH-001T-P0.6 or equivalent
2	RC-		

Screw Spec.	L(max)	Torque(max)
M4	4mm	0.9N·m

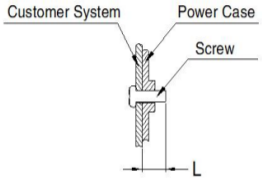

Note:
Unit: mm[inch]
Wire range: 22-12AWG
Connector tightening torque: M3.5 , 0.8N·m
General tolerances: ±1.00[±0.039]

Block Diagram

PFC fosc : 100KHz
PWM fosc : 100KHz

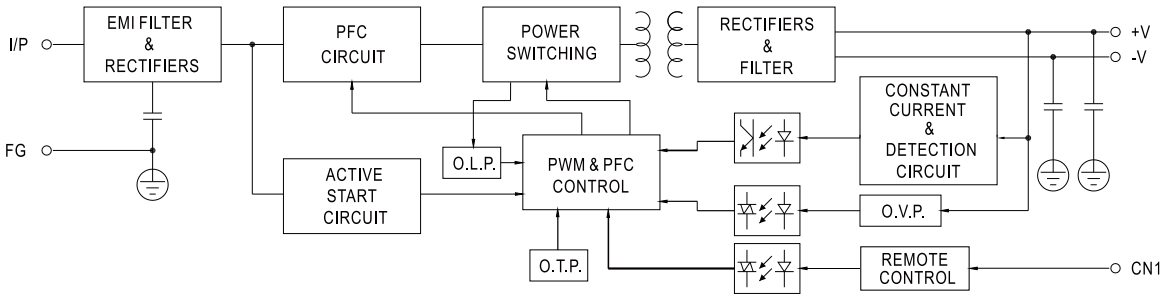

Deduction curve and temperature

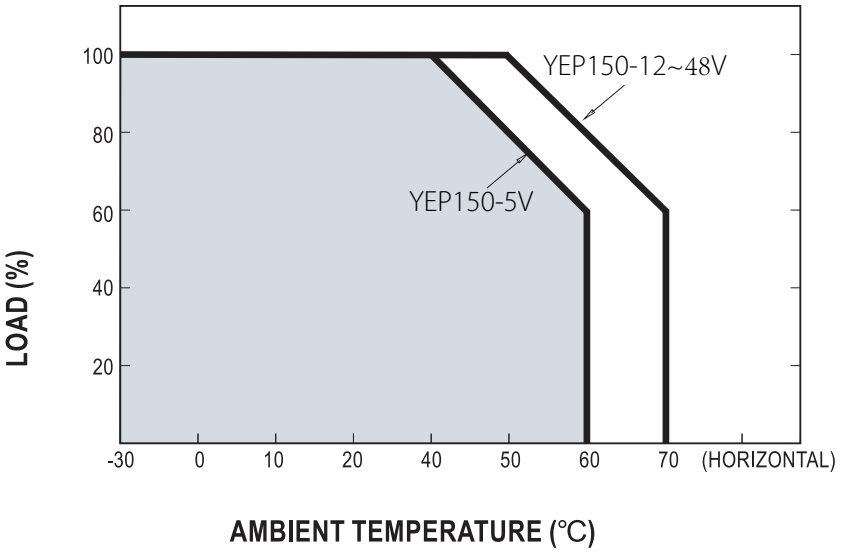

Minus output and input voltage curves

